TEAR SHEET

Liam Small Articulating Sconce

Item # S 2640PN-MTB

Designer: Studio VC
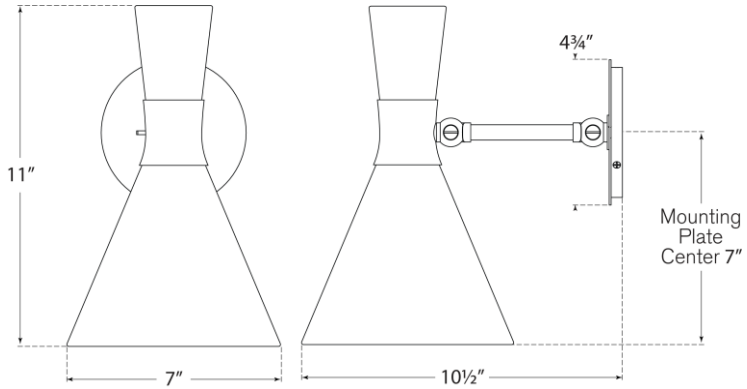
Height: 11"
Width: 7"
Extension: 10.5"
Backplate: 4.75" Round
Finishes: HAB, PN
Shade Treatments: MTB, WHT
Socket: E12 Candelabra
Wattage: 40 B11
Weight: 4 Pounds