Item # : HT68ATTSW
Assembly Instructions

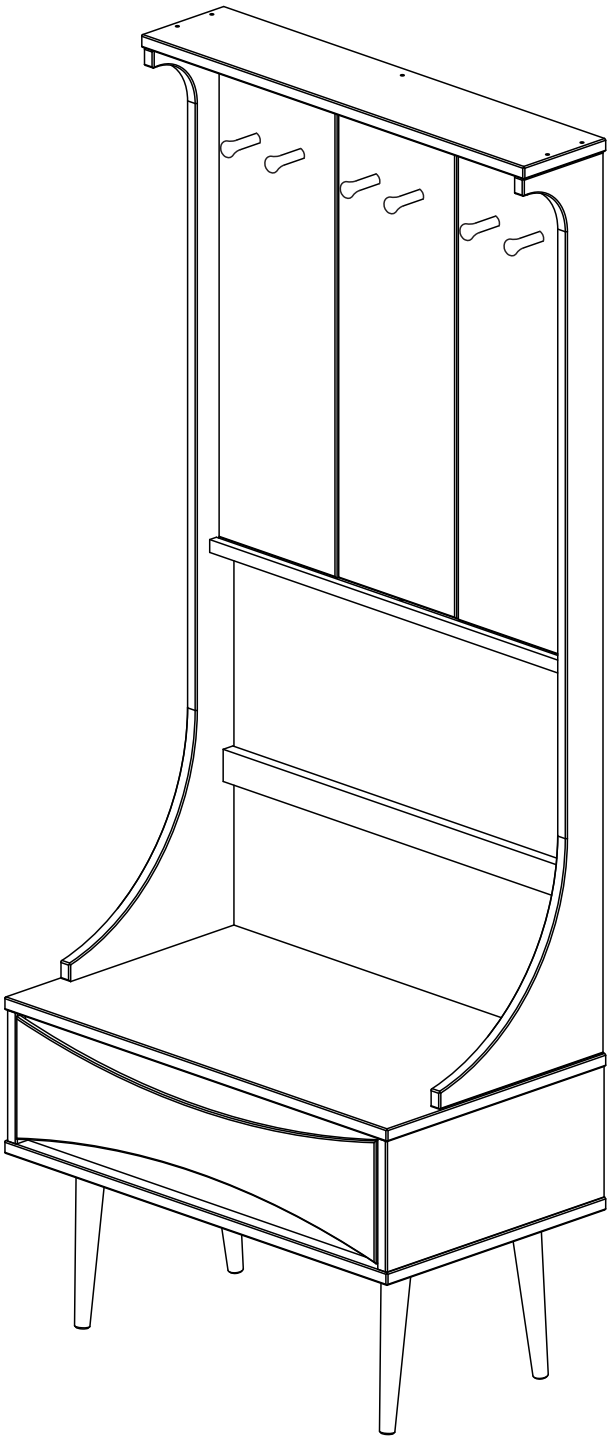

Walker Edison®

Please visit our website for the most current instructions, assembly tips, report damage, or request parts. ***www.walkeredison.com***

Revised 01/2020

Copyright © 2018, by Walker Edison Furniture Co., LLC. All rights reserved.

General Assembly Guidelines

I. Ensure that all parts and hardware are available before beginning assembly.

II. Follow each step carefully to ensure the proper assembly of this product.

III. Two people are recommended for ease in the assembly of this product.

IV. The three main types of hardware used to assemble this product are : wood dowels , screws and bolts.

V. The provided glue is to secure wood dowels in place . When first inserting dowels , locate the appropriate hole for the dowel , place a small amount of glue in the hole and insert the dowel . Wipe away excess glue immediately.

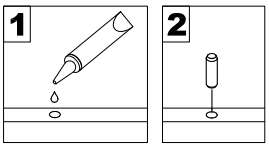

In future assembly steps when dowels are necessary to attach assembly parts together , place a small amount of glue on the end of the dowel before attaching parts together . Wipe away excess glue immediately.

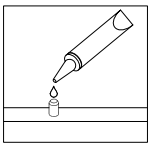

VI. A Phillips head screwdriver or power tolls is required to assembly this product.

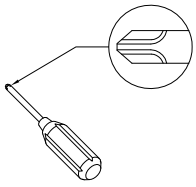

Parts List

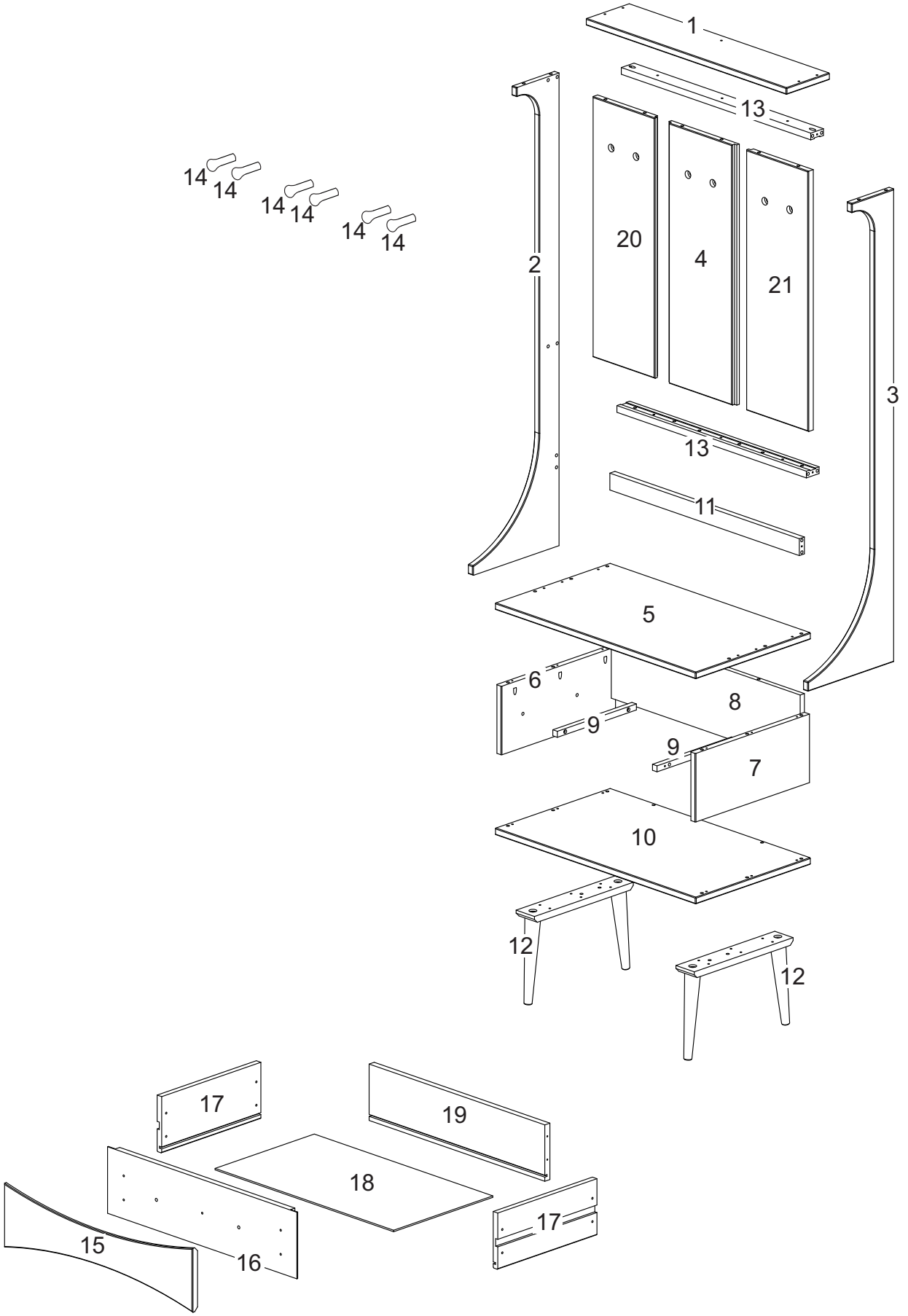
1
13
14
14
14
14
14
14
2
20
4
21
3
13
11
5
6
8
9
9
7
10
12
12
17
19
18
17
15
16

Hardware List

A		Ø8.0x30mm	Wooden dowel	54	pcs
B		Ø4x35mm	Screw	61	pcs
C		Ø4x25mm	Screw	09	pcs
D	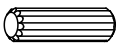	Ø8.0x20mm	Wooden dowel	06	pcs
E	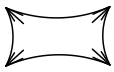		Glue tube	01	pcs
F		Ø4x14mm	Screw	02	pcs
G			Stop	02	pcs
Y	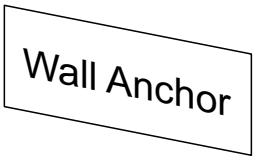		Wall Anchor	01	pcs

A Phillips head screwdriver or power tolls is required to assembly this product (Not included).

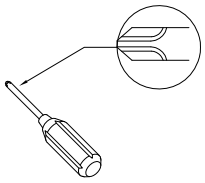

The hardware quantities listed above are required for proper assembly.
Some extra hardware may also have been included.

Step 1

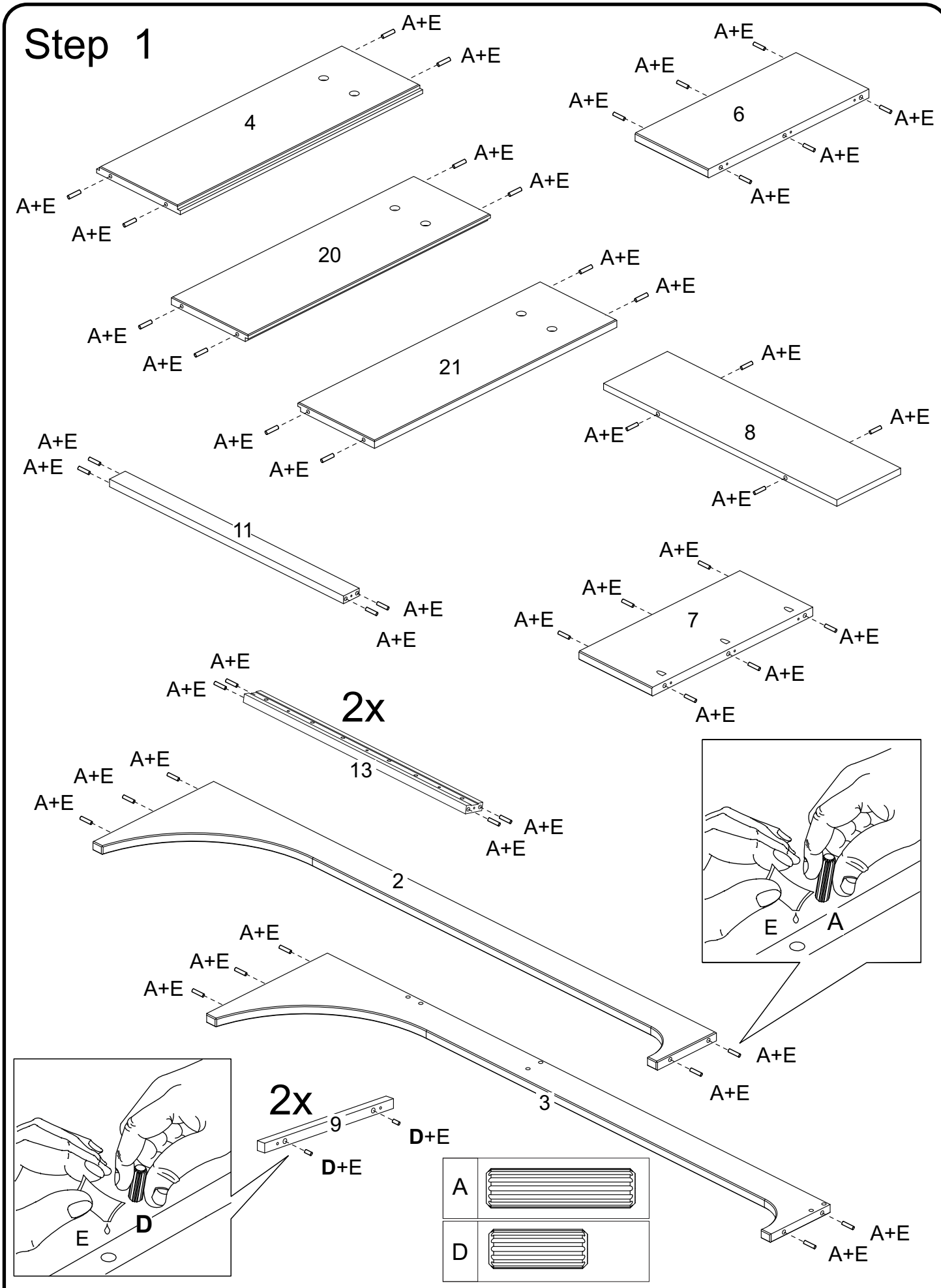

Insert dowel (A) with glue (E) into parts (2,3,4,6,7,8,11,13, 20, 21).
Insert dowel (D) with glue (E) into parts (9).

Step 2

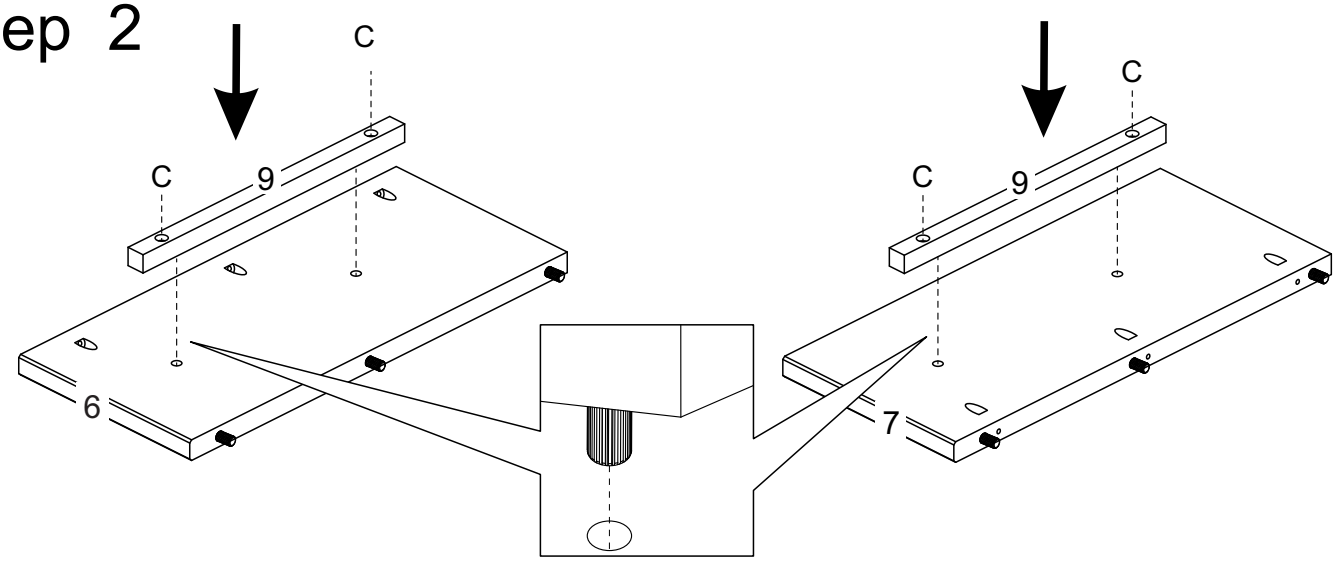

Attach parts (9) to parts (6,7) using screw (C).

Step 3

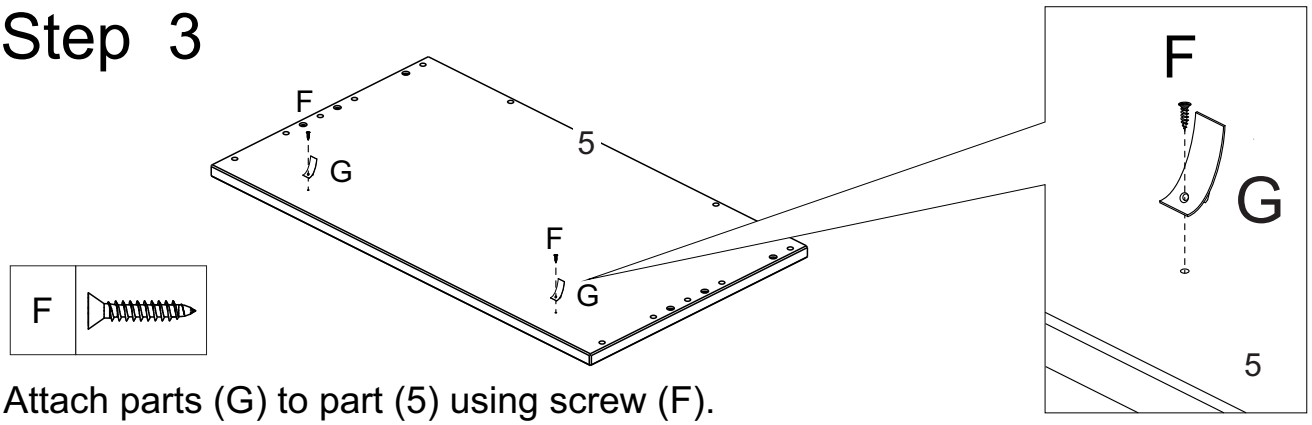

Attach parts (G) to part (5) using screw (F).

Step 4

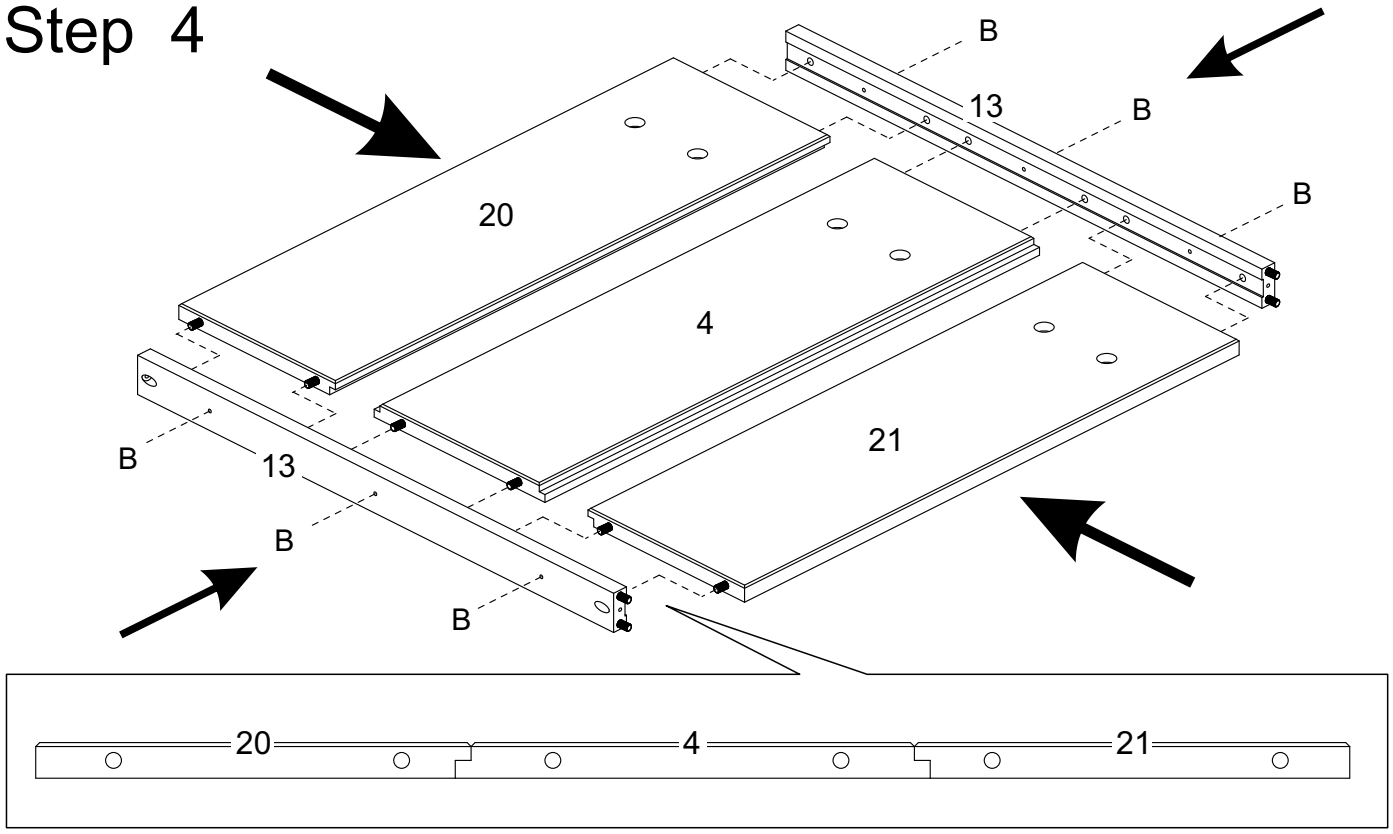

Attach parts (4, 20, 21) to parts (13) using screw (B).

Step 5

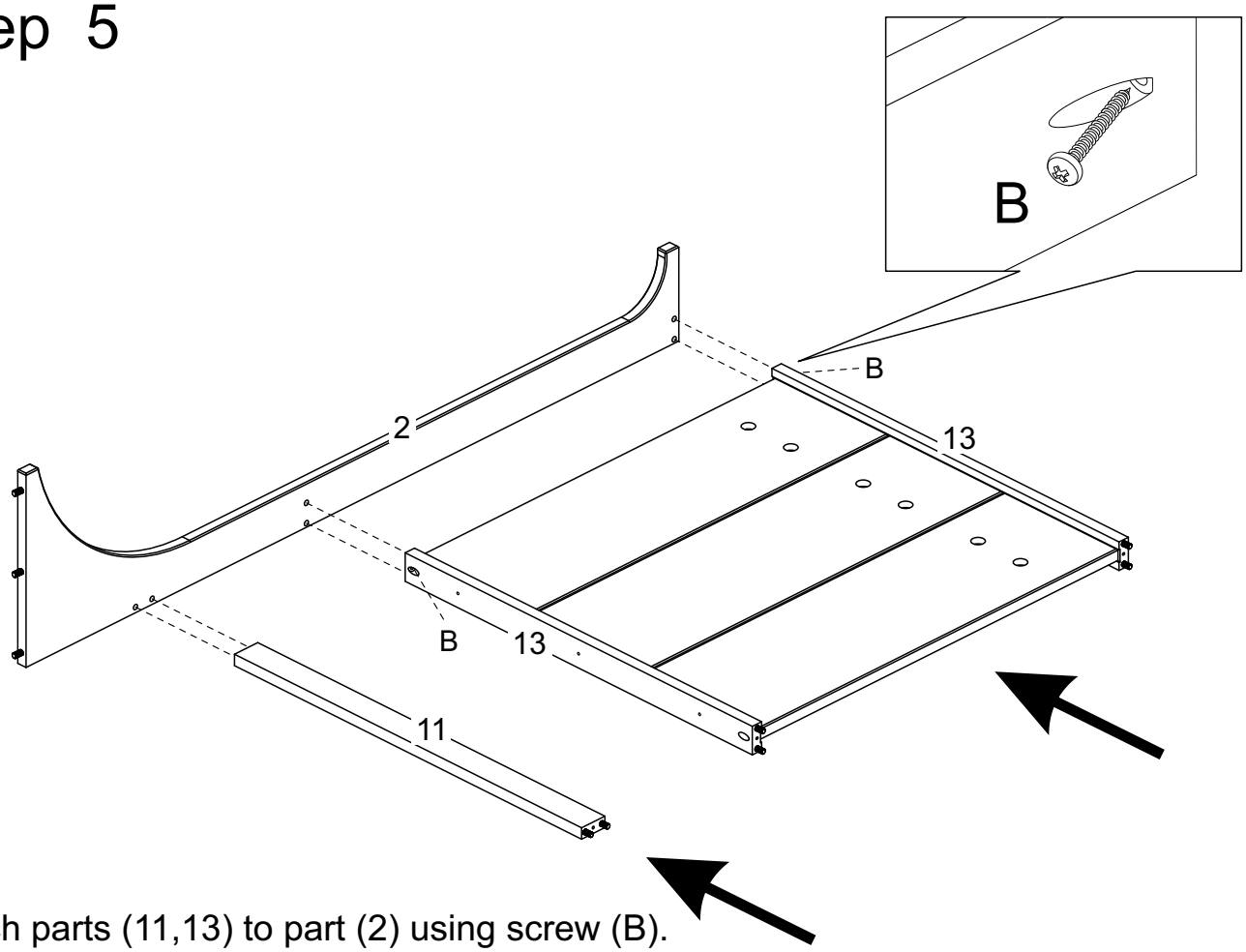

Attach parts (11,13) to part (2) using screw (B).

Step 6

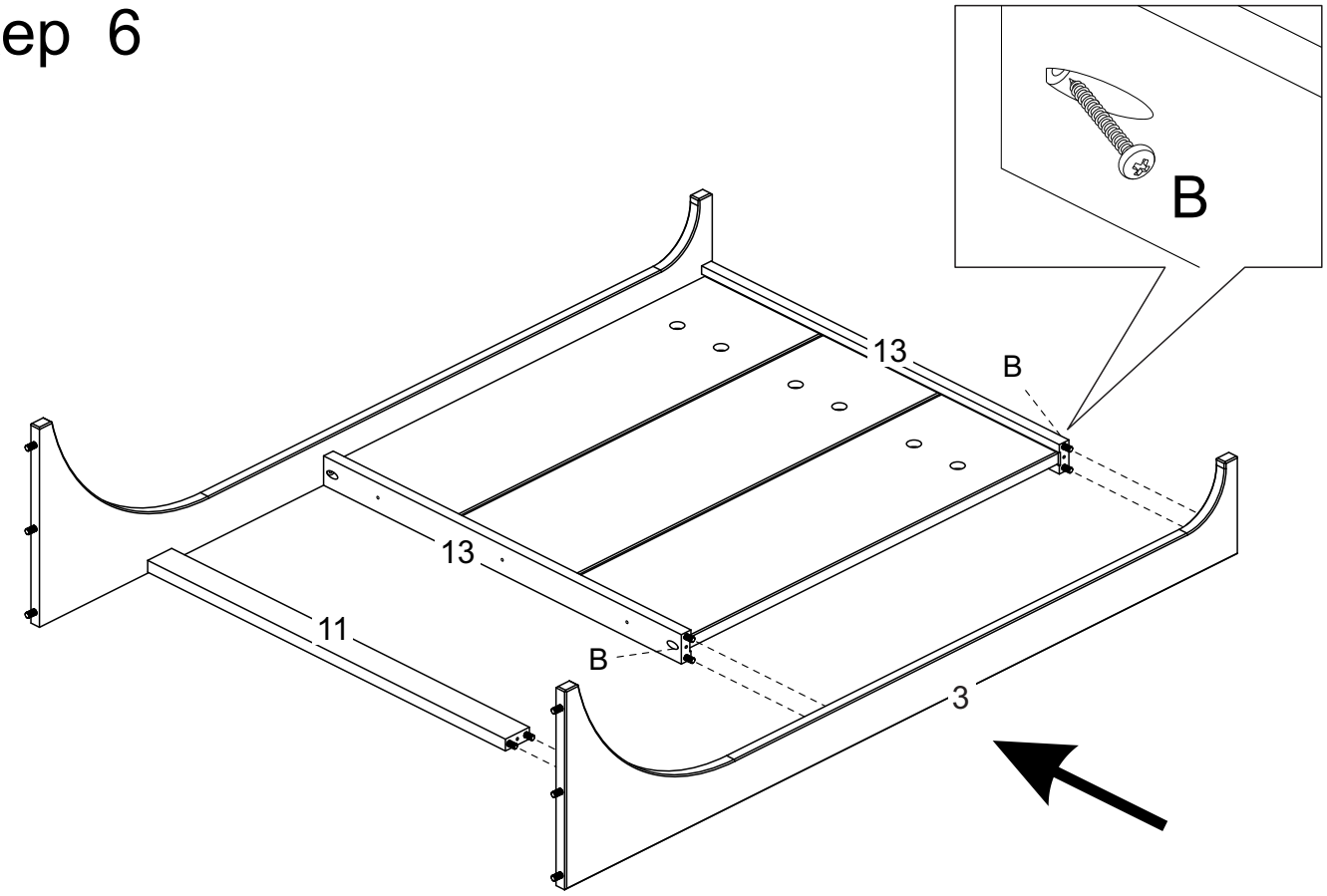

Attach parts (11,13) to part (3) using screw (B).

Step 7

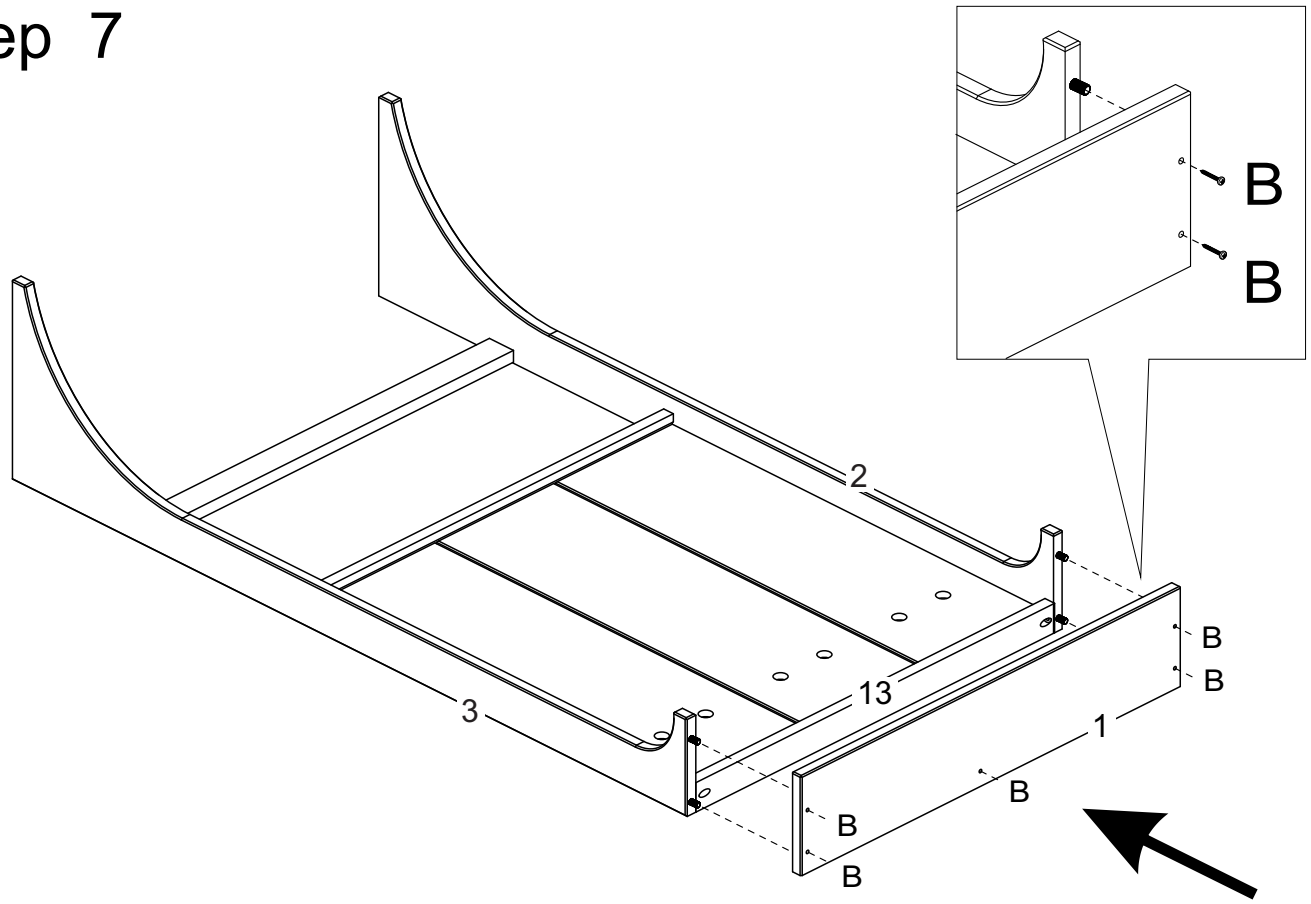

Attach part (1) to parts (2,3,13) using screw (B).

Step 8

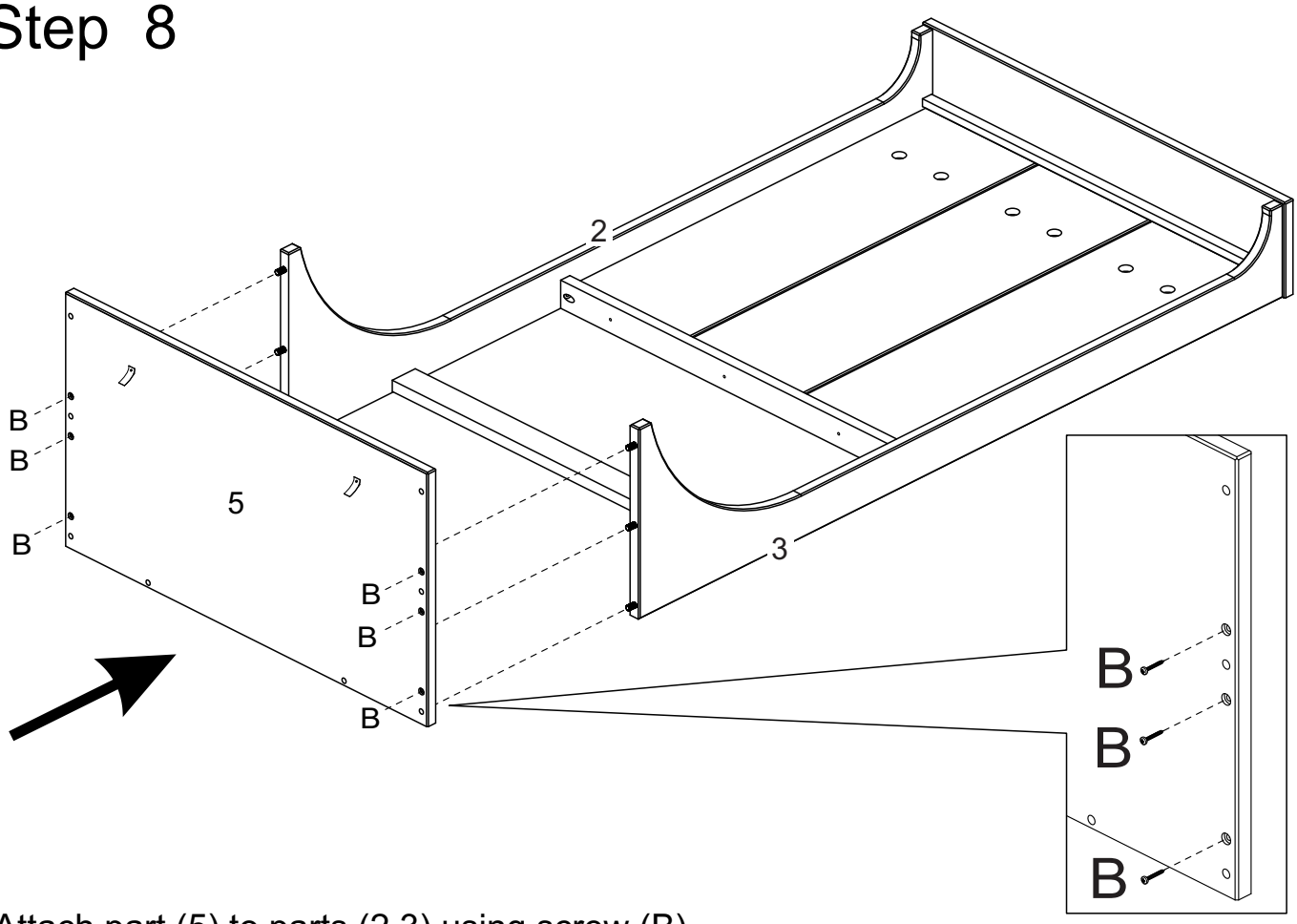

Attach part (5) to parts (2,3) using screw (B).

Step 9

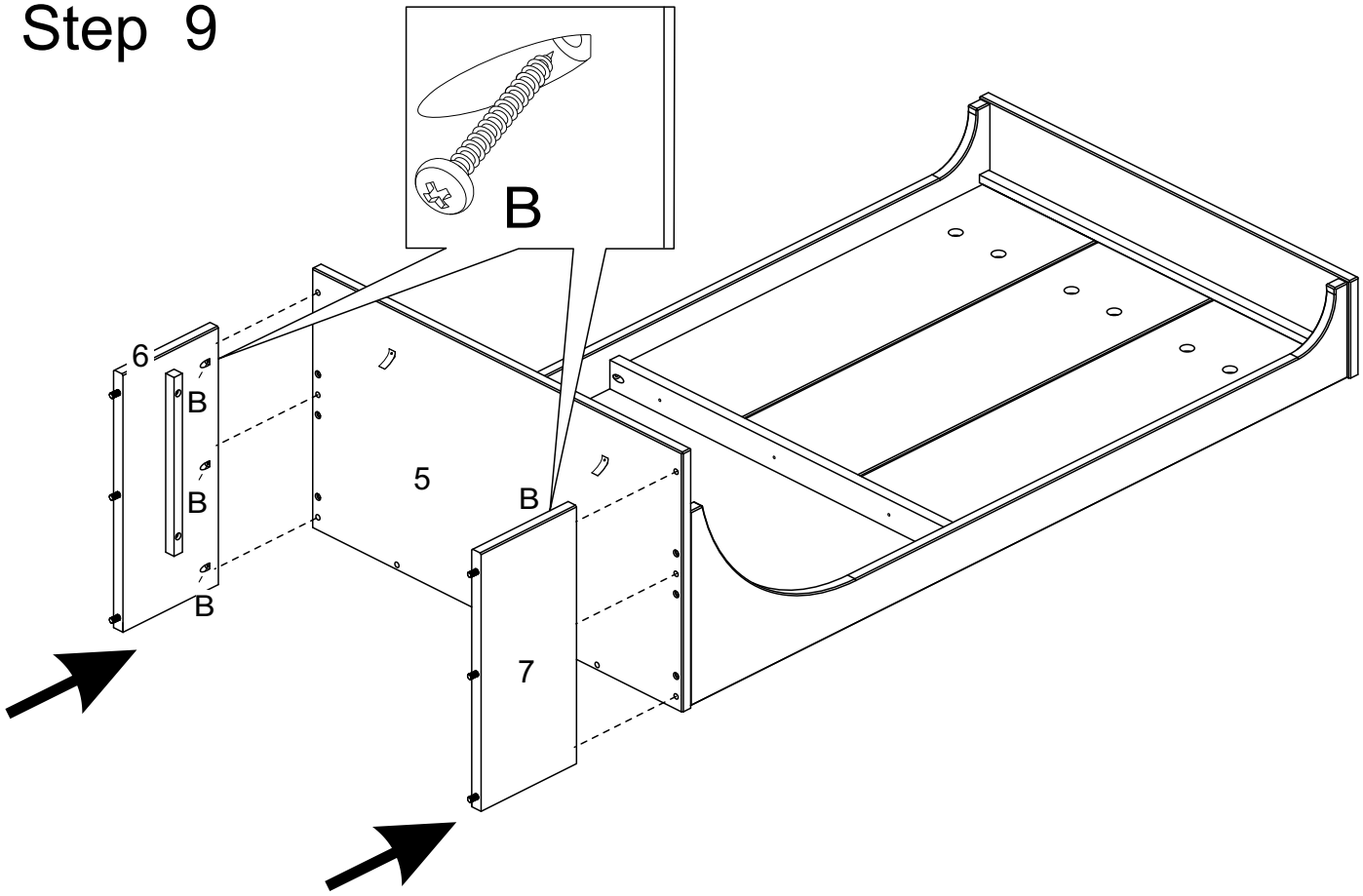

Attach parts (6,7) to part (5) using screw (B).

Step 10

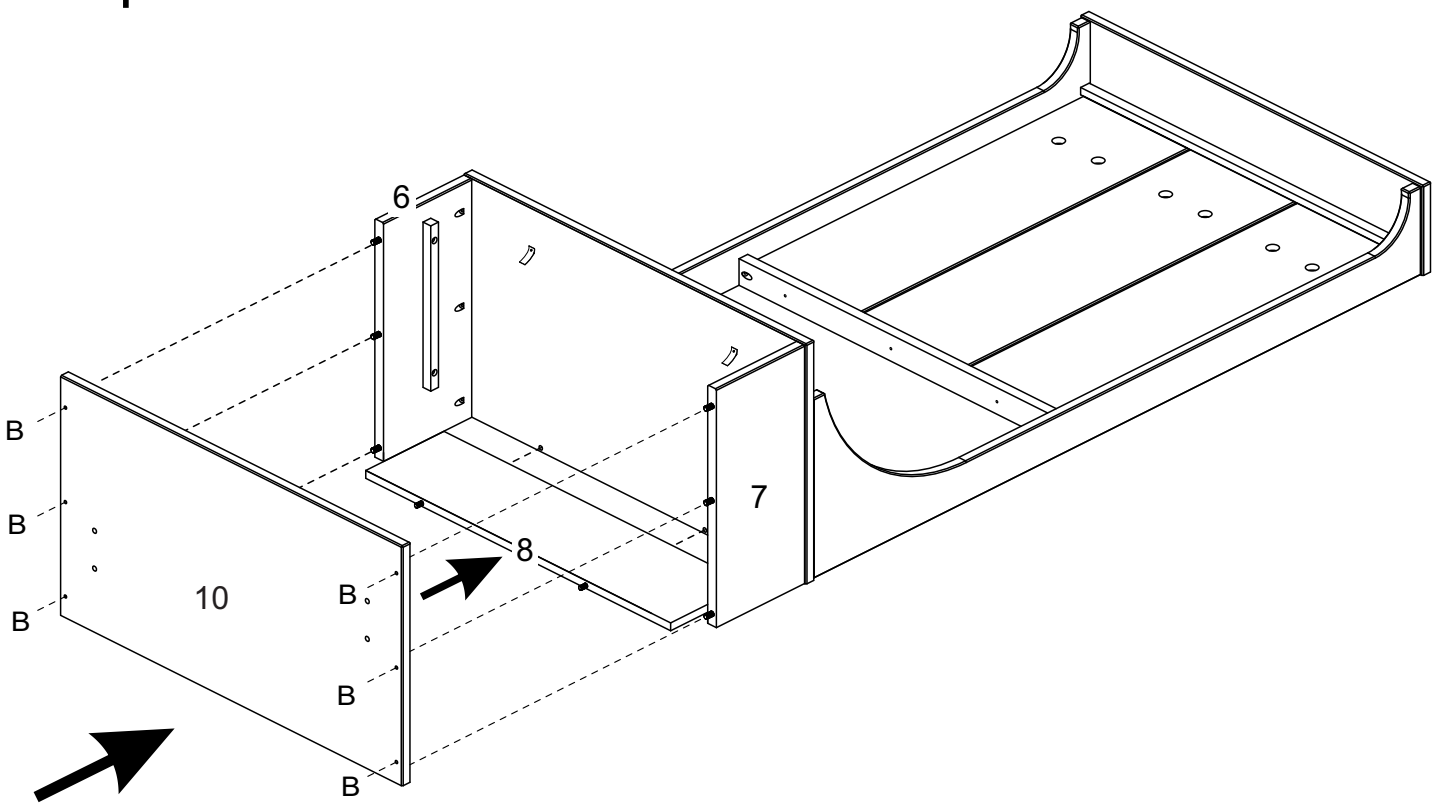

Attach part (8) to part (5). Attach part (10) to parts (6,7) using screw (B).

Step 11

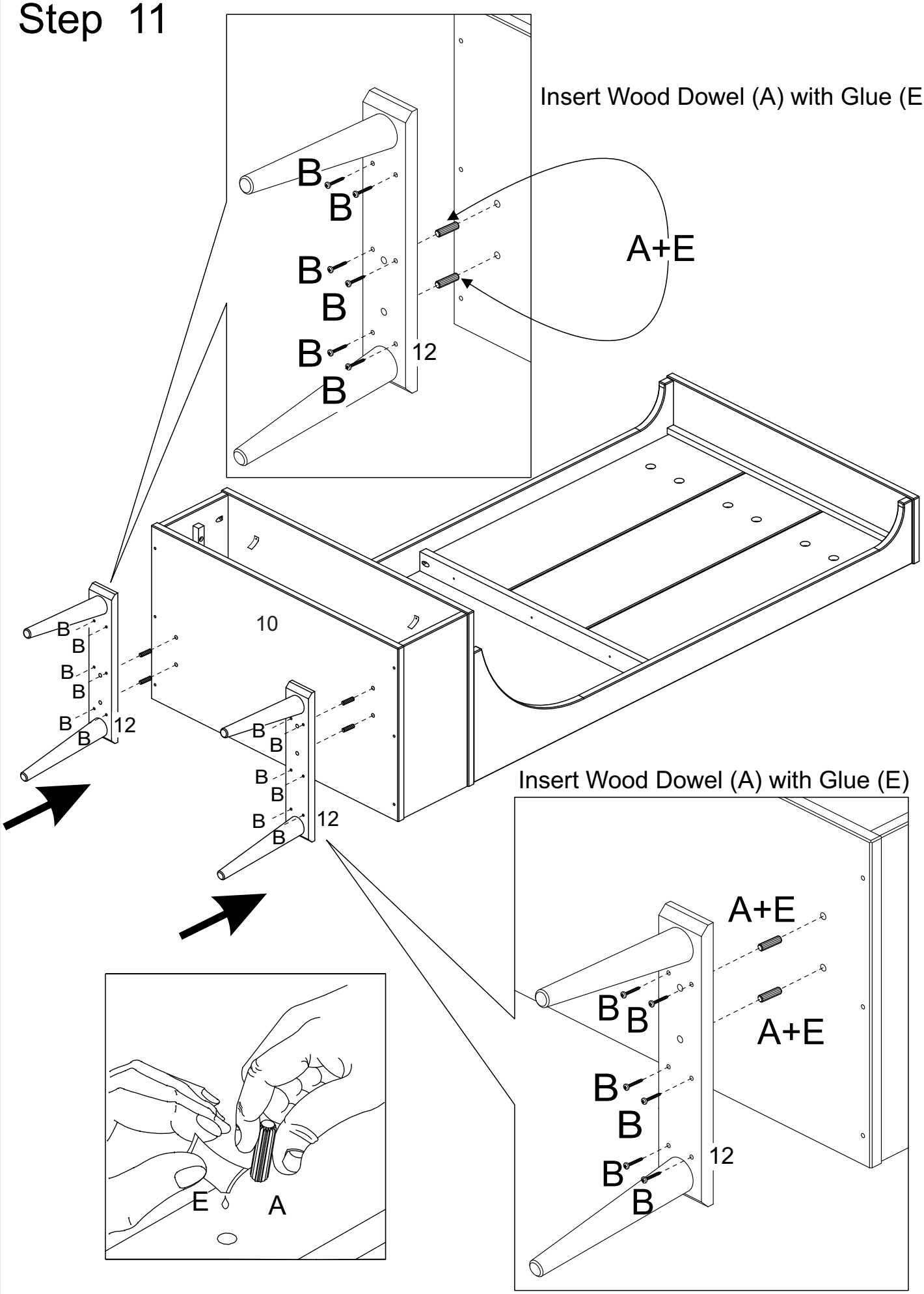

Attach parts (12) to part (10) using screw (B).

Step 12

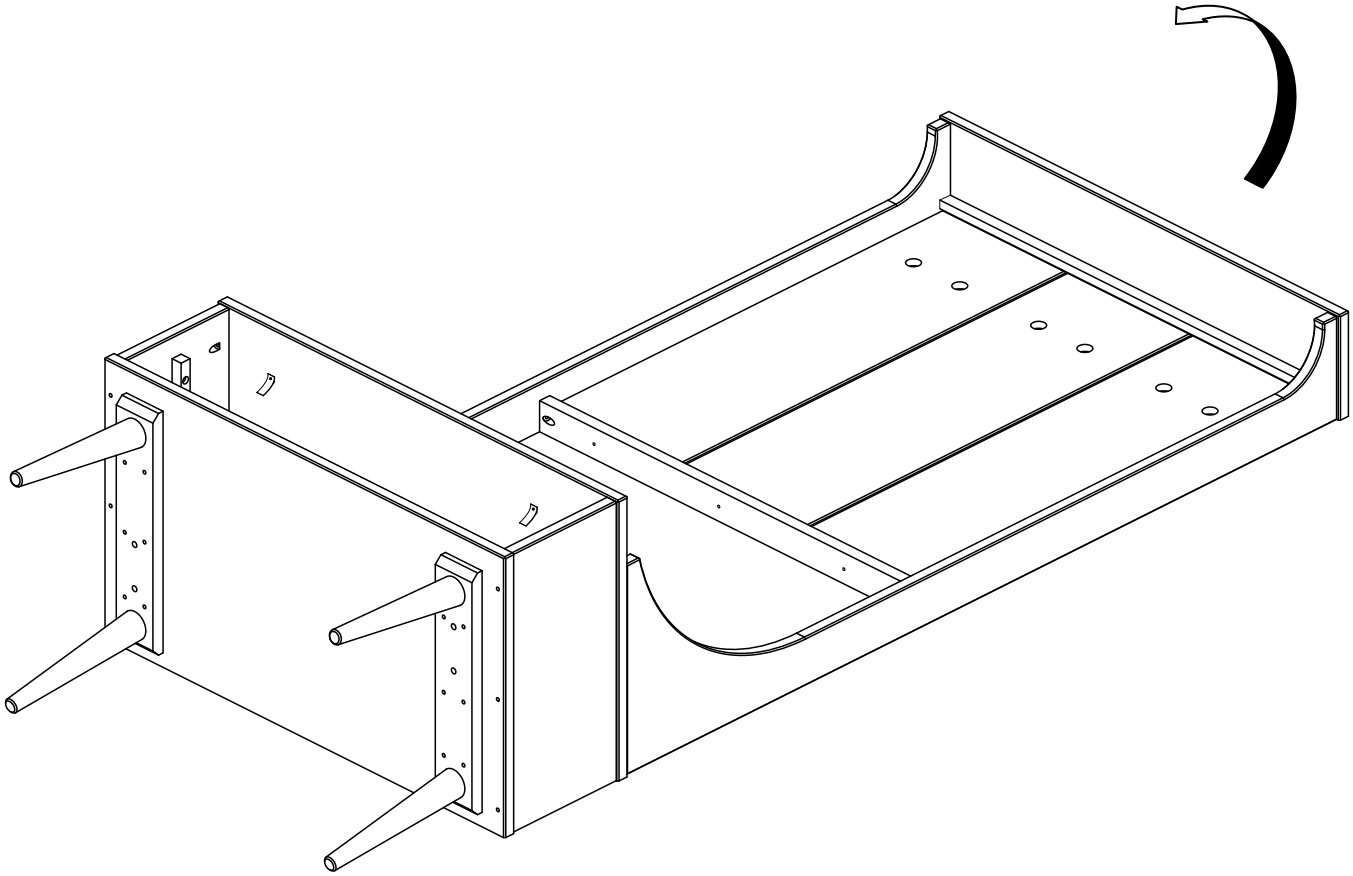

Two People are recommended for moving this item
Please place item on a level surface
(do not place the back feet first when moving)

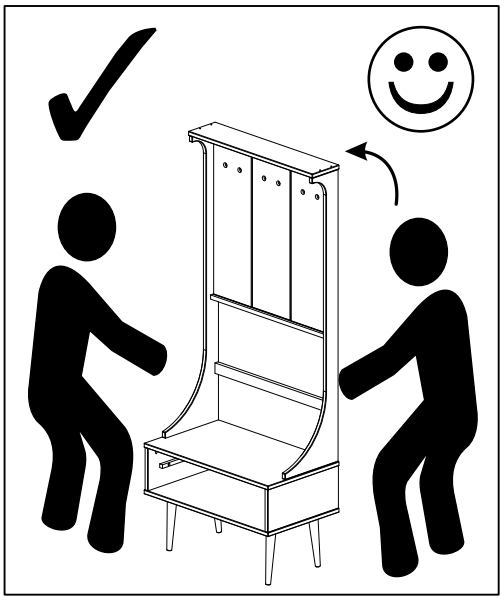

Step 13

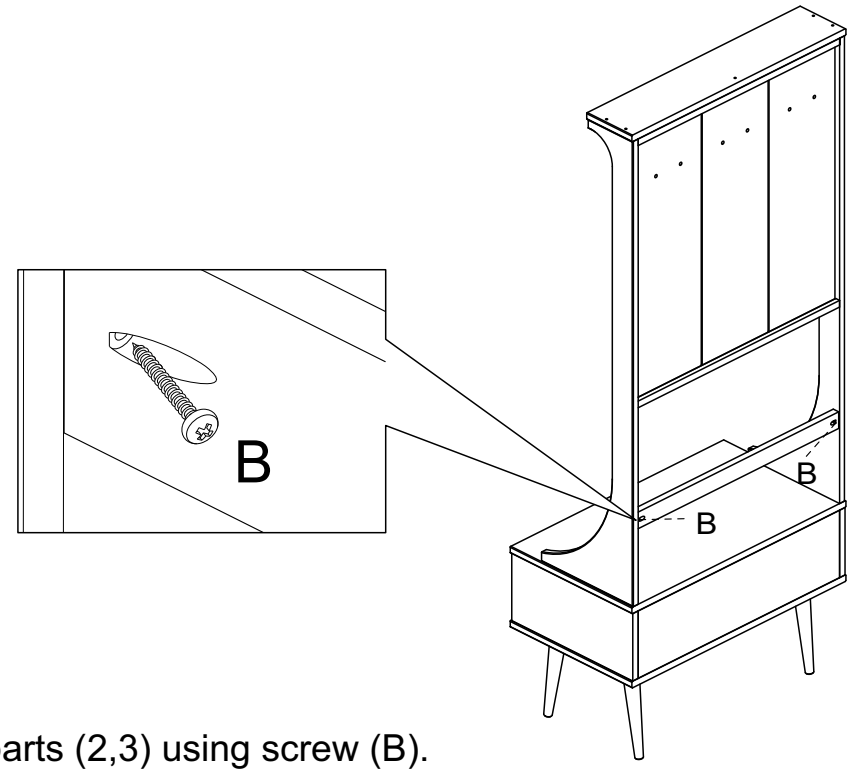

Attach part (11) to parts (2,3) using screw (B).

Step 14

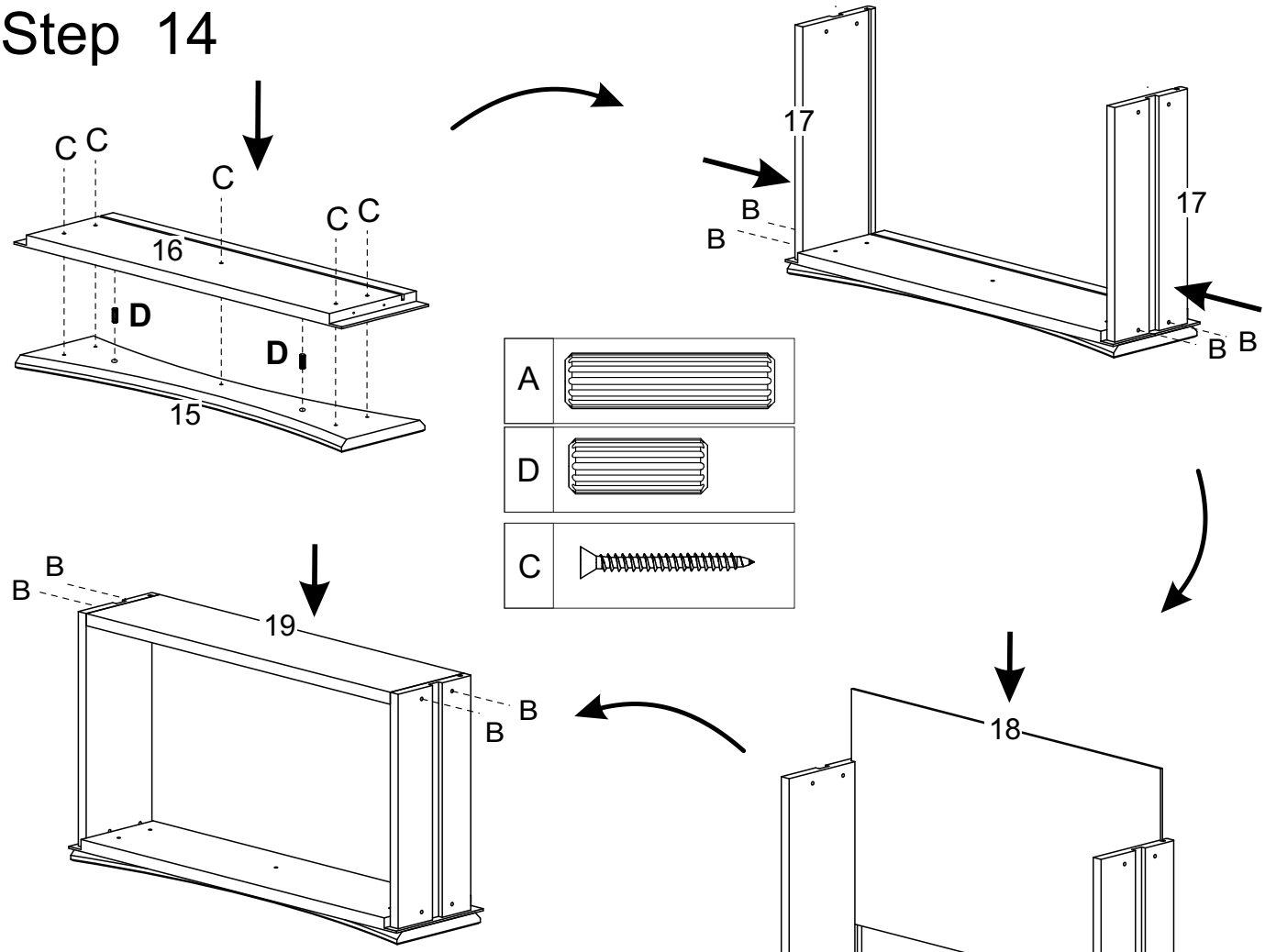

Insert dowel (D) into part (15).
Attach part (16) to part (15) using screw (C).
Attach parts (17) to part (16) using screw (B).
Attach part (18) to parts (16,17).
Attach part (19) to parts (17) using screw (B).

Step 15 Insert Drawer in Runner parts (9).

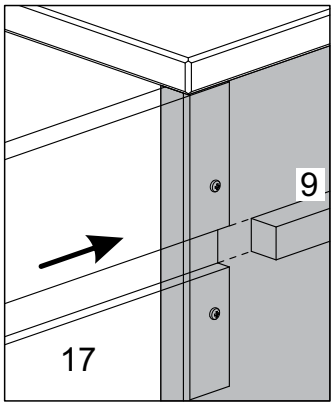

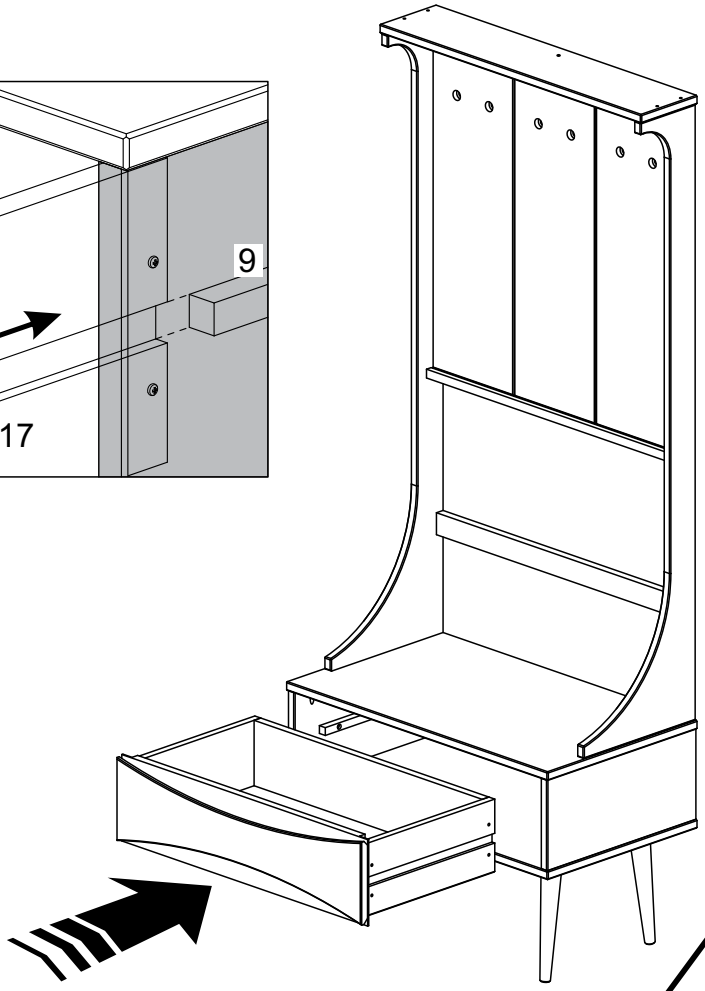

To remove the drawer you need to open it,
after turning the stop fixed on the panel (5)

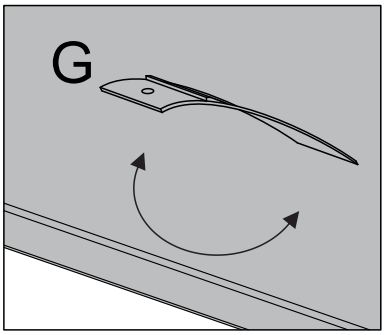

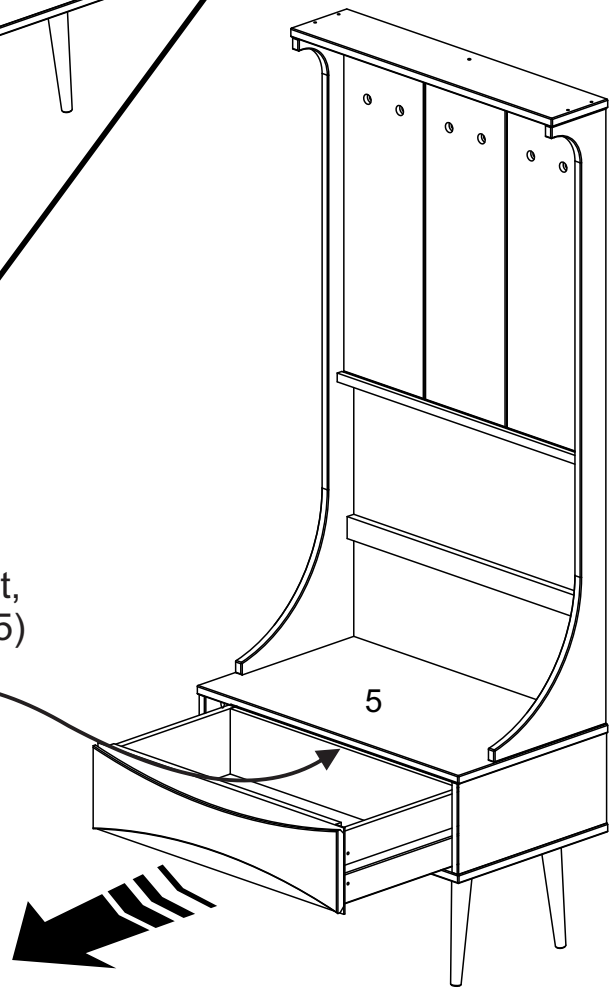

Step 16

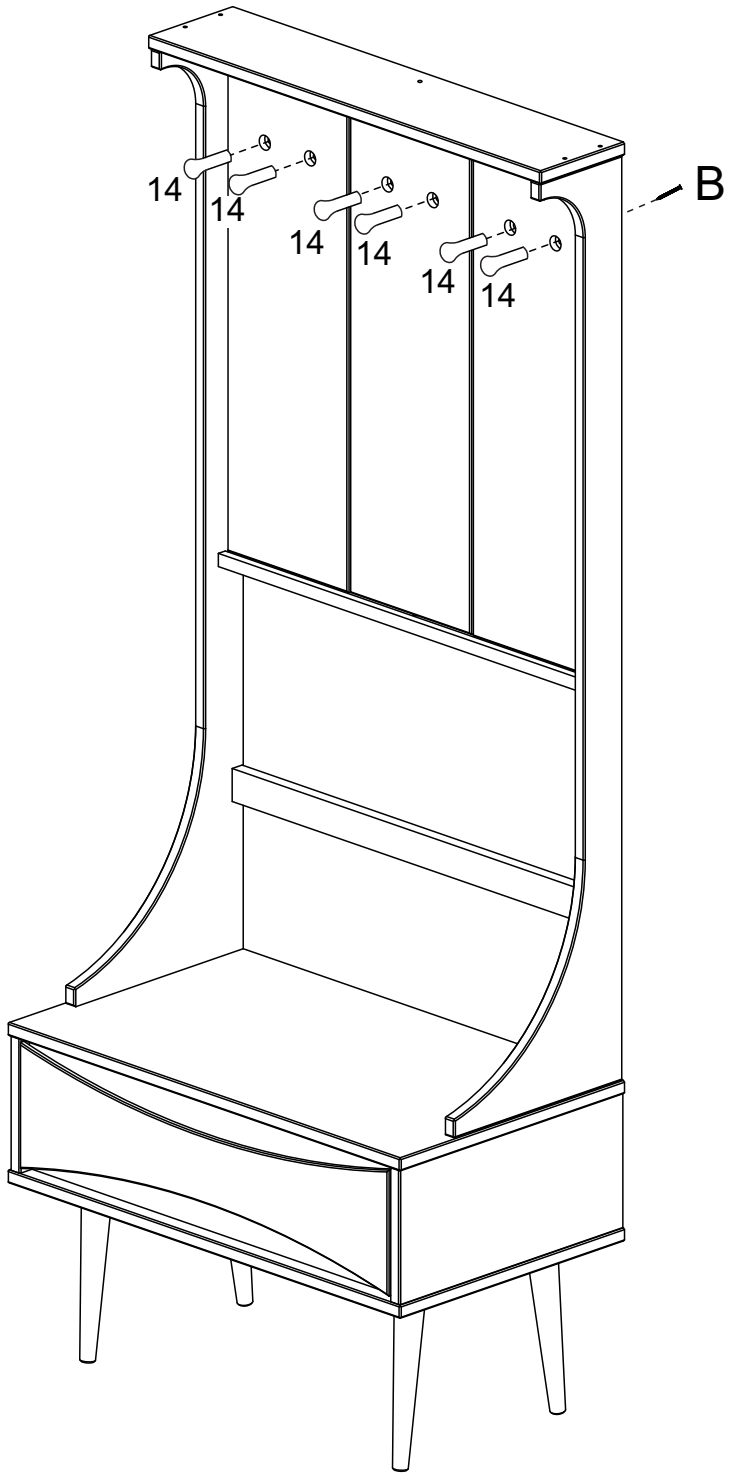

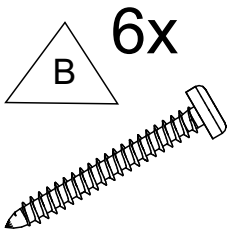

Secure pegs (14) to parts (4, 20, 21) using screw (B) .

WARNING

Serious or fatal injuries can occur from furniture tipping over. To prevent the furniture from tipping over we recommend that it is permanently fixed to the wall.

Wall anchor and hardware are included with this product. Please make sure hardware is suitable for your walls before installing, as different wall materials may require different types of anchors.

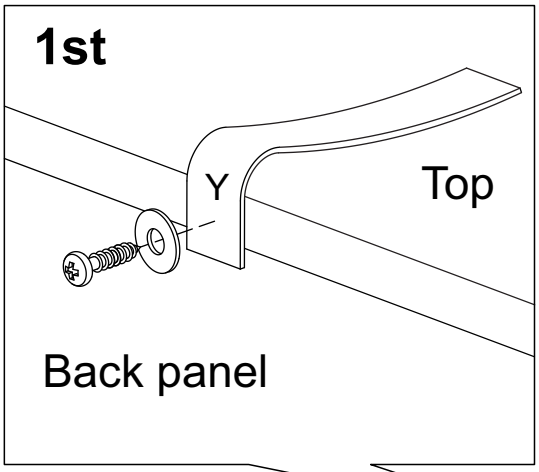

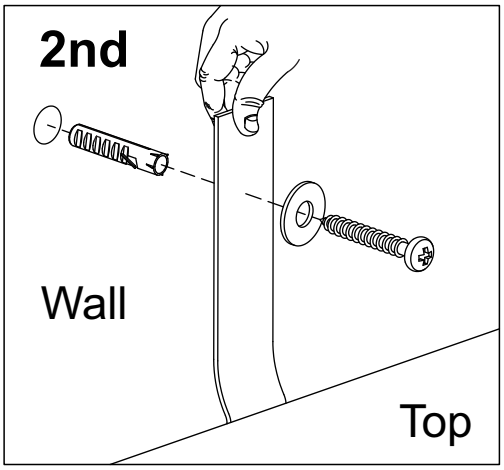

Hardware of Wall Anchor

Ø3,5*30mm	01
	01
	02
	01
Ø3,5*16mm	01

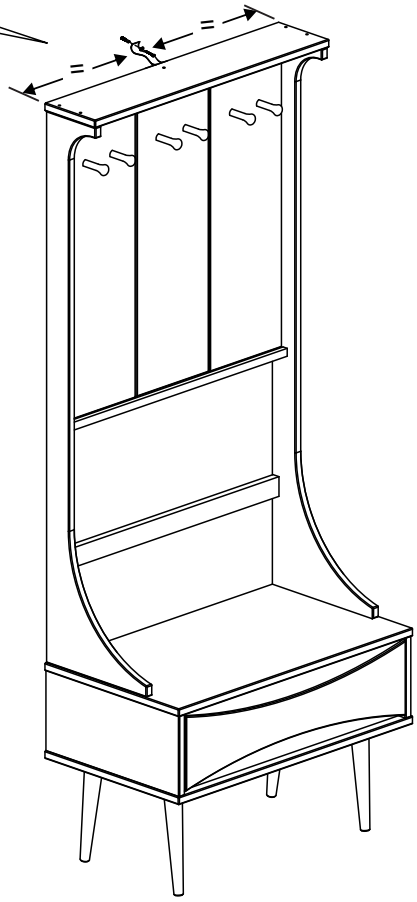

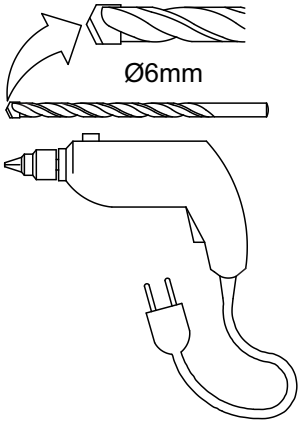

WARNING: CHECK FOR HIDDEN PIPES AND CABLES BEFORE DRILLING.

Final Assembly