E616-07MR

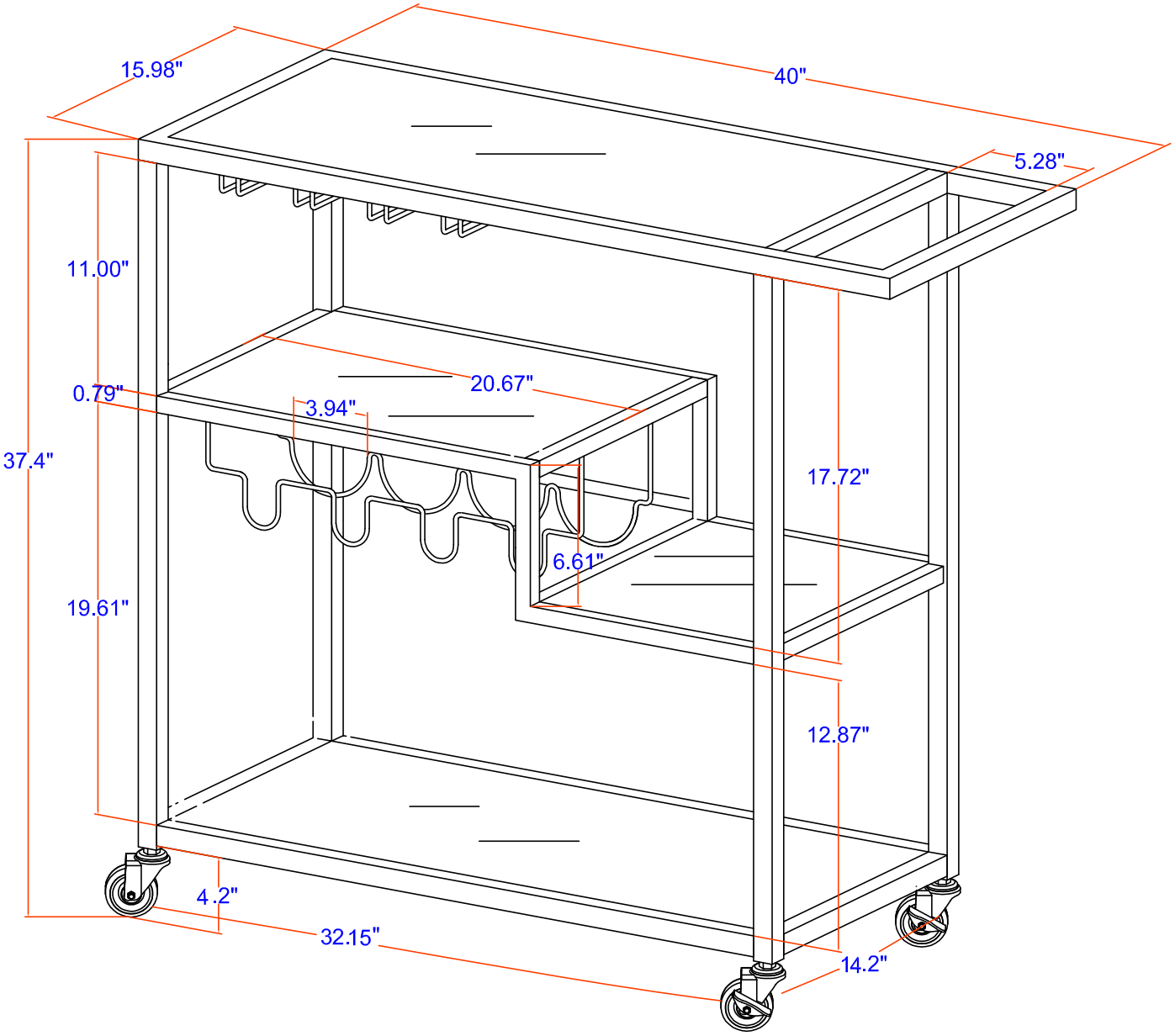
15.98"
40"
5.28"
11.00"
0.79"
20.67"
3.94"
37.4"
17.72"
6.61"
19.61"
12.87"
4.2"
32.15"
14.2"